skkmigas PERTAMINA EP	**PERTAMINA EP REGIONAL 1 ZONA 4**	POG

MECHANICAL DATASHEET FOR FUEL GAS PACKAGE (Z-002)	No. Dok. : TMBP-SP001-ME-DST-D128 Rev. : A Halaman : 1 dari 8

NAMA PEMILIK PROYEK : **PT PERTAMINA EP**

NAMA PROYEK : **JASA PEMBANGUNAN FASILITAS PRODUKSI STASIUN PENGUMPUL (SP) TANJUNG MIRING BARAT & KARANGAN TIMUR**

LOKASI : **SP TANJUNG MIRING BARAT & KARANGAN TIMUR - FIELD LIMAU**

NO. KONTRAK : **SA02035383B**

REV.	TGL.	DESKRIPSI	DISIAPKAN	DIPERIKSA	DISETUJUI	DIPERIKSA	DISETUJUI
A	24/12/2025	Issued For Review	RFL	AS	RTN		
			PT. PROSYMPAC OIL & GAS			PT. PERTAMINA EP	

TABEL REVISI

Rev.	Tanggal	Deskripsi

COMMENT RESPONSE SHEET

No.	Page	Company's Comment	Contractor's Response	Remarks

DAFTAR ISI

TABEL REVISI 2
COMMENT RESPONSE SHEET 3
DAFTAR ISI 4
1. GENERAL 5
1.1 Latar Belakang 5
1.2 Tujuan 7
1.3 Ruang Lingkup 7
1.4 Istilah 7
2. KODE, STANDAR, DAN REFERENSI 8
3. Daftar Singkatan 8
LAMPIRAN (MECHANICAL DATASHEET) 10

1. GENERAL

1.1 Latar Belakang

Struktur Tanjung Miring Barat (TMB) terletak di Kabupaten Muara Enim dan Kota Prabumulih, sekitar 20 kilometer di sebelah tenggara Kota Prabumulih, dengan luas daerah sekitar 8 km². Struktur Karangan (KRG) terletak di Kabupaten Muara Enim dan Kota Prabumulih, sekitar 15 kilometer di sebelah selatan Kota Prabumulih, dengan luas daerah sekitar 45 km².

ID	Easting (Meter)	Northing (Meter)	Elevation (Meter)	Feature Code
PN-1531	424962,745	967376,210	10,414	
PM-8593	425000,093	907528,777	19,046	

Gambar 1. Lokasi Rencana SP Tanjung Miring Barat - Karangan Timur

Lapangan Tanjung Miring Barat telah diproduksi sejak tahun 1938 dan terus beroperasi hingga tahun 2003 dengan produksi terakhir dari sumur TMB-11. Sejak dinonaktifkannya lapangan ini, fasilitas produksi yang terdiri dari flowline, stasiun pengumpul, serta jalur pengiriman pipa minyak ke custody transfer (PPP Prabumulih) sudah tidak layak operasi. Apabila akan dilakukan pengembangan lapangan, diperlukan pembangunan fasilitas produksi baru yang dapat menampung produksi hidrokarbon dari lapangan Tanjung Miring Baral serta memprosesnya agar sesuai dengan spesifikasi yang dipersyaratkan di titik serah. Saat ini status SP TMB adalah idle atau tidak beroperasi, sehingga produksi sumuran menggunakan Tank On-Site (TOS) dan dikirim secara gross ke SP-II TMT menggunakan trucking. Dikarenakan tidak adanya line gas ke sumur-sumur struktur TMB, supply Listrik untuk pumping unit menggunakan solar (diesel engine). Lapangan Karangan Timur hanya diproduksikan dari 2 sumur yaitu KRG-9 dan KRG-10 beroperasi mulai tahun 1984, dimana kondisi eksisting jalur pengiriman minyak dari sumur menggunakan trucking. Apabila akan dilakukan

pengembangan lapangan, diperlukan pembangunan fasilitas produksi baru yang dapat menampung produksi hidrokarbon dari lapangan Tanjung Miring Barat serta memprosesnya agar sesuai dengan spesifikasi yang dipersyaratkan di titik serah.

Dalam rencana jangka panjang sebagai upaya peningkatan produksi, PT Pertamina EP berencana akan mengembangkan Lapangan Tanjung Miring Barat dan Karangan Timur melalui pengembangan fasilitas produksi dimana rencana kerja pengembangan fasilitas akan dibagi ke dalam dua fase.

Pada fase pertama, produksi dari pengembangan awal TMB -KRG Timur akan dikirimkan menuju fasilitas sewa Early Production Facility (EPF) untuk selanjutnya dikirimkan menuju SP-1 TLJ melalui trunkline baru. Pada fase ini lingkup fasilitas produksi yang akan dibangun adalah flow/ine dari sumuran, sewa EPF dan trunkline dari EPF sampai dengan SP-1 TLJ.

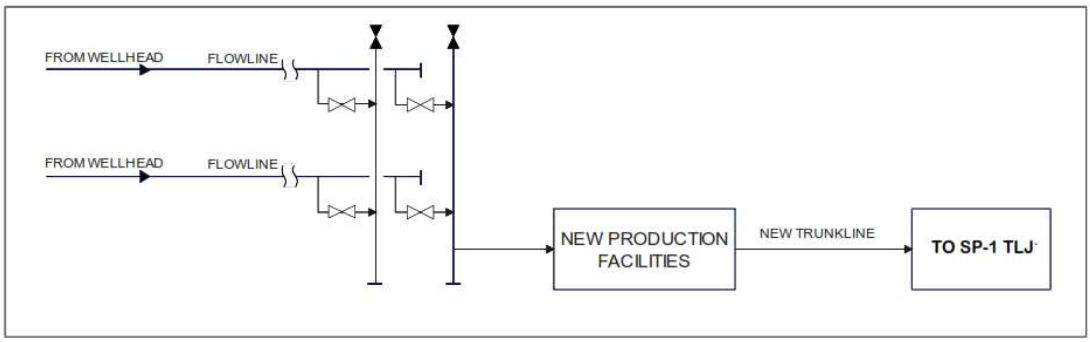

Gambar 2. Rencana Pola Operasi Fase

Pada fase kedua, akan dilakukan pengembangan tambahan dari sumur-sumur TMB-KRG Timur. Pada fase ini, lingkup fasilitas produksi yang akan dibangun meliputi pembangunan flowline dari sumuran pengembangan lanjutan serta peningkatan fasilitas SP TMB untuk menggantikan sewa EPF.

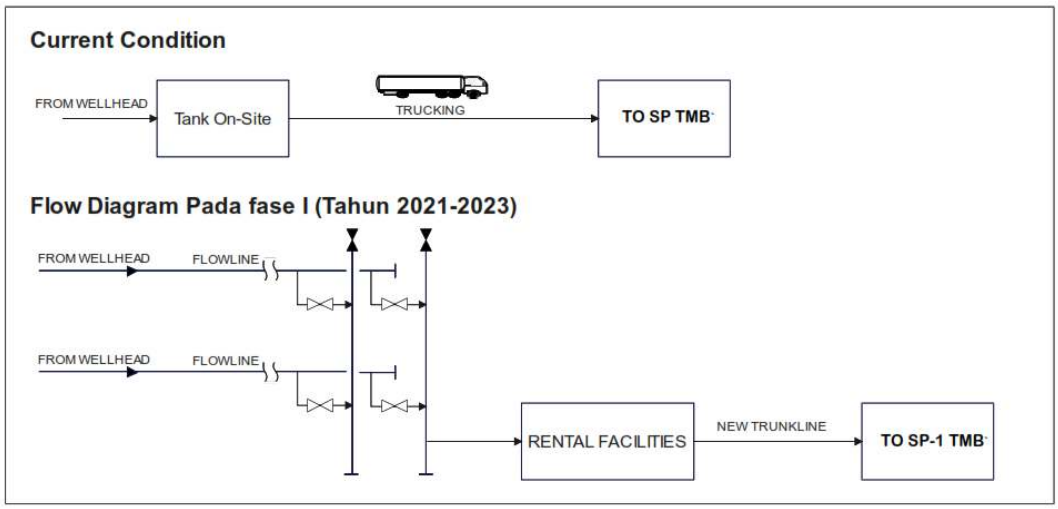

Gambar 3. Rencana Pola Operasi Fase

1.2 Tujuan

Dokumen ini menjelaskan dipersiapkan sebagai Mechanical Datasheet for Fuel Gas Package (Z-002) sebagai bagian dari desain yang harus diikuti oieh KONTRAKTOR dan VENDOR untuk proyek Pembangunan Fasilitas Stasiun Pengumpul Lapangan Tanjung Miring Barat- Karangan Timur, Field Prabumulih.

1.3 Ruang Lingkup

Mechanical Datasheet ini meliputi ketentuan minimal dalam mengatur desain. material,pabrikasi, pemeriksaan, pengujian, persiapan, pengecatan dan persiapan untuk pengiriman Fuel Gas Package (Z-002) untuk dipasang di proyek Pembangunan Fasilitas Stasiun Pengumpul Lapangan Tanjung Miring Barat — Karangan Timur, Field Prabumulih.

1.4 Istilah

Dokumen ini berisi istilah-istilah yang memiliki definisi tercantum sebagai berikut:

Perusahaan	Perusahaan yang dimaksud adalah PT PERTAMINA HULU ROKAN selaku Pemilik dan Pengguna Fasilitas akhir.
Kontraktor	Pihak yang dipilih oleh PERUSAHAAN sebagai pelaksana pekerjaan pengadaan dan konstruksi yang akan bertanggung jawab kepada PERUSAHAAN.
Vendor	Pihak lain yang akan menyediakan sesuatu untuk kebutuhan proyek, selain yang disediakan oleh PERUSAHAAN dan KONTRAKTOR, disebut VENDOR. Tanggung jawabnya langsung kepada KONTRAKTOR baik terhadap PO maupun bentuk perjanjian lain antara VENDOR dan

	KONTRAKTOR.
SKK MIGAS	Suatu badan dari Pemerintah Indonesia yang bertanggung jawab terhadap proses persetujuan dan izin untuk semua fasilitas di lingkungan minyak dan gas.
Perencana	Pihak yang dipilih oleh PERUSAHAAN sebagai pelaksana pekerjaan Jasa FEED Engineering Services. Dalam hal ini disebut PERENCANA, yang akan bertanggung jawab kepada PERUSAHAAN sebagaimana dirinci dalam kontrak, scope of work, atau work order.
Inspektor	Perwakilan dari PERUSAHAAN dan/atau seseorang yang ditunjuk oleh PERUSAHAAN, yang bertanggung jawab sebagai INSPEKTOR atas pekerjaan yang dilakukan oleh KONTRAKTOR.SINGKATAN

2. KODE, STANDAR, DAN REFERENSI

DOKUMEN PROYEK

1. TMBP-SP001-ME-DBS-D101 — Mechanical Design Basis
2. TMBP-SP001-PR-PID-D116 — PID DIESEL FUEL SYSTEM
3. TMBP-SP001-ME-SPE-0105 — Specification for Air Compressor & Dryer Package

3. Daftar Singkatan

Beberapa singkatan yang paling umum digunakan tercantum dalam daftar berikut:

BOPD	*Barrel Oil Per Day*
BPD	*Barrel Per Day*
BWPD	*Barrel Water Per Day*
EOR	*Enhanced Oil Recovery*
FEED	*Front End Engineering Design*
KRG	*Karangan*
MMSCFD	*Million Standard Cubic Feet per Day*
NPS	*Nominal Pipe Size*
PB	*Production Battery*
PHR	*Pertamina Hulu Rokan*

PT	*Perseroan Terbatas*
SP	*Stasiun Pengumpul*
SCH	*Schedule*
TMB	*Tanjung Miring Barat*
TMT	*Tanjung Miring Timur*
WK	*Wilayah Kerja*

Applicable to	: **PROPOSAL**	**Client**	: **PT. PERTAMINA EP**
Tag No.	: **Z-002**	**Quantity**	: **1 UNITS**
Service	: **FUEL GAS PACKAGE**	**Code & Standard**	:
P & ID No.	: **TMBP-01-PR-PID-118**	**Manufacturer**	: **As per PML**

1	**PACKAGE SCOPE OF SUPPLY**
2	- The fuel gas skid is expected to handle the separation of liquid carry over and heating of fuel gas before entering of fuel gas distribution.
3	- The package shall be supplied with all items required to START, OPERATE, and SHUTDOWN safely.
4	- The supply shall include the following major equipment as minimum:
5	a. 1 x 100% Fuel Gas Scrubber
6	b. 2 x 100% Fuel Gas Filter
7	c. On skid instrument and Monitoring Device
8	d. On skid Electrical & Instrument Wiring, Cables, Cable Tray and Junction Box (Skid Junction Box for Controls and Safety System shall be separated
9	f. Structural skid with drip pan & drain nozzle
10	g. Platforms, ladders, and Hand Railing, as required
11	h. Marked Escape Route
12	i. Thermal Insulation (IF ANY)
13	j. On Skid Shutdown / Safety Devices / Instrumentation separated control and monitoring
14	k. Junction Box connected to unit control panel located in MCC Room
15	l. Unit Control Panel ON/OFF/AUTO/MANUAL switch and Instrumentation Device
16	**GENERAL REQUIREMENTS**

17	CAPACITY	0.5 MMSCFD	OPERATING	PRESSURE: 100 psig
18	INLET CONDITION	PRESSURE : 100 psig		TEMPERATURE: 80 degF
19		TEMPERATURE: 80.41 degF	DESIGN	PRESSURE: 200 psig
20	OUTLET CONDITION	PRESSURE : 90 psig		TEMPERATURE: 150 degF
21		TEMPERATURE: 79.79 degF		

22	**PROCESS INLET CONDITION**			
23	**FUEL GAS PROPERTIES**	**UNIT**	**MAXIMUM CASE**	**MINIMUM CASE**
24	PHASE		Vapour	Vapour
25	VAPOUR FRACTION		1	1
26	TEMPERATURE	F	80.41	80.41
27	PRESSURE	Psig	100	100
28	MOLAR FLOW	MMSCFD	0.24	0.24
29	MASS FLOW	lb/hr	488	488
30	ACTUAL LIQUID FLOW	barrel/day	0	0
31	MOLECULAR WEIGHT	lb/lbmol	18.57	18.57
32	MASS DENSITY	lb/ft3	0.37	0.37
33	MASS HEAT CAPACITY	Btu/lb-F	0.48	0.48
34	MASS ENTHALPY	Btu/lb-F	-1623.9	-1623.9
35	VISCOSITY		0.01	0.01
36	Z FACTOR	cP	0.98	0.98
37	THERMAL CONDUCTIVITY	Btu/hr-ft-F	0.02	0.02
38	Cp/Cv		1.32	1.32
39	**PROCESS INLET CONDITION**			
40	**FUEL GAS PROPERTIES**	**UNIT**	**MAXIMUM CASE**	**MINIMUM CASE**
41	CO2	%mole	0.0062	0.0062
42	Nitrogen	%mole	0.1108	0.1108
43	Oxygen	%mole	0	0
44	Methane	%mole	0.8353	0.8353
45	Ethane	%mole	0.028	0.028
46	Propane	%mole	0.0102	0.0102
47	i-Butane	%mole	0.0022	0.0022
48	n-Butane	%mole	0.0018	0.0018
49	i-Pentane	%mole	0.0009	0.0009
50	n-pentane	%mole	0.0007	0.0007
51	n-Hexane	%mole	0.0012	0.0012
52	H2O	%mole	0.0027	0.0027
53	Total	%mole	1	1

skkmigas / PERTAMINA EP	**JASA PEMBANGUNAN FASILITAS PRODUKSI STASIUN PENGUMPUL (SP)** **TANJUNG MIRING BARAT & KARANGAN TIMUR**	POG

Nomor Dokumen	Judul Dokumen	Rev.	Date	Page
TMBP-SP001-ME-DST-D128	MECHANICAL DATASHEET FOR FUEL GAS PACKAGE (Z-002)	A	19-Des-25	5 OF 8

Applicable to	: **PROPOSAL**	**Client**	: **PT. PERTAMINA EP**
Tag No.	: **Z-002**	**Quantity**	: **1 UNITS**
Service	: **FUEL GAS PACKAGE**	**Code & Standard**	:
P & ID No.	: **TMBP-01-PR-PID-118**	**Manufacturer**	: **As per PML**

CONNECTION TO/FROM SKID (*)

MARK	QTY	DESCRIPTION	SIZE (IN)	RATING	FACING	REMARKS
1	1	INLET FROM TALANG JIMAR	4	150	WNRF	Tie - In Point from TLJ-157 & SKG-01
2	1	OUTLET CLOSED DRAIN VESSEL	2	150	WNRF	Tie - Out Point to Closed Drain Vessel
3	1	OUTLET TO GEG PACKAGE	3	150	WNRF	Tie -- Out Point to GEG Package
4	1	INLET FROM INSTRUMENT AIR SYSTEM	2	150	WNRF	Tie-in Point from Instrument Air System
5	1	OUTLET FOR PILOT GAS	2	150	WNRF	Tie - Out Point for Pilot Gas
6	1	OUTLET TO FLARE	3	150	WNRF	Tie-in point flare to header

UTILITIES AND CONSUMPTION

The Fuel Fas Skid Supply shall inform the required utilities to be supplied

UTILITY AIR (CONTINUOUS REQUIREMENT)	Min	4 SCFM	Max	4 SCFM
	PRESSURE	100 Psig	TEMPERATURE	120 degF
	Air Consumption	6.8 Nm3/hr		
UTILITY AIR (INTERMITTENT REQUIREMENT)	Min	8 SCFM	Max	4 SCFM
	PRESSURE	100 Psig	TEMPERATURE	120 degF
	Air Consumption	13.6 Nm3/hr		
POWER SUPPLY	400 V 50 Hz 3 Ph			
	RATED POWER		(*) kW	
INSTRUMENT POWER SUPPLY	230 V 50 Hz 1 Ph			
UPS POWER SUPPLY	230 V 50 Hz 1 Ph			
AREA CLASSIFICATION	CLASS 1 , ZONE 2 GAS GR IIA & TEMP T3			

P&ID VENDOR SCOPE

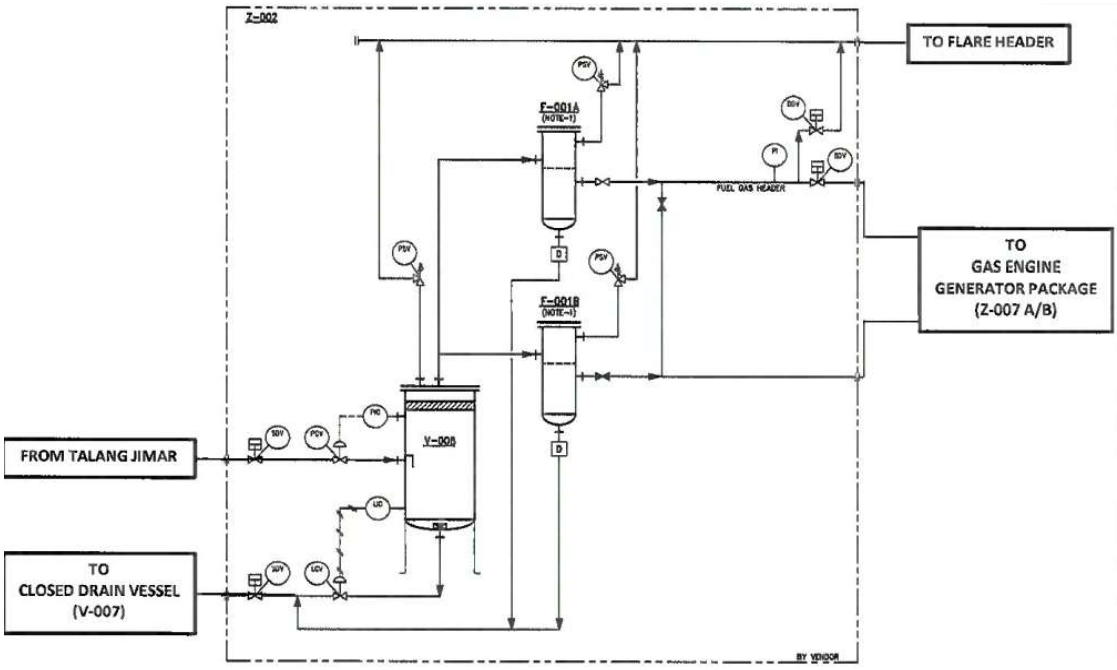

ESTIMATED SKID WEIGHT AND DIMENSION

EMPTY WEIGHT	2000 (*) kg	Length (m)	3.5 (*)
OPERATING WEIGHT	(*) kg	Width (m)	2.5 (*)
WEIGHT FULL OF WATER	(*) kg	Height (m)	3 (*)

skkmigas PERTAMINA EP	**JASA PEMBANGUNAN FASILITAS PRODUKSI STASIUN PENGUMPUL (SP) TANJUNG MIRING BARAT & KARANGAN TIMUR**	POG

Nomor Dokumen	Judul Dokumen	Rev.	Date	Page
TMBP-SP001-ME-DST-D128	MECHANICAL DATASHEET FOR FUEL GAS PACKAGE (Z-002)	A	19-Des-25	6 OF 8

Applicable to	**: PROPOSAL**	**Client**	**: PT. PERTAMINA EP**
Tag No.	**: Z-002**	**Quantity**	**: 1 UNITS**
Service	**: FUEL GAS PACKAGE**	**Code & Standard**	**:**
P & ID No.	**: TMBP-01-PR-PID-118**	**Manufacturer**	**: As per PML**

1	**FUEL GAS SCRUBBER (V-008)**		**FUEL GAS FILTER (F-001 A/B)**	
2	DESIGN CODE	ASME VIII Div.1 Latest Edition	DESIGN CODE	ASME VIII Div.1 Latest Edition
3	TAG NUMBER	V-008	TAG NUMBER	V-008
4	NO REQUIRED	1 (ONE)	NO REQUIRED	1 (ONE)
5	ORIENTATION	VERTICAL	ORIENTATION	VERTICAL
6	SERVICE	HYDROCARBON GAS/LIQUID	SERVICE	HYDROCARBON GAS/LIQUID
7	TYPE	VTA	TYPE	VTA
8	PARTICLE SIZE (note 10)	10(*) micron	PARTICLE SIZE (note 10)	10(*) micron
9	REMOVED PARTICLE	WATER, OIL DROPLET, DUST	REMOVED PARTICLE	WATER, OIL DROPLET, DUST
10	CAPACITY	0.5 MMSCFD	CAPACITY	0.5 MMSCFD
11	DIMENSION	VTA	DIMENSION	VTA
12	OPERATING PRESSURE	100 psig	OPERATING PRESSURE	100 psig
13	OPERATING TEMPERATURE	80 degF	OPERATING TEMPERATURE	80 degF
14	DESIGN PRESSURE	200 psig	DESIGN PRESSURE	200 psig
15	DESIGN TEMPERATURE	150 degF	DESIGN TEMPERATURE	150 degF
16	DENSITY OF CONTENT	0.37 lb/ft^3	DENSITY OF CONTENT	0.37 lb/ft^3
17	SUPPORT TYPE	LEG (*)	SUPPORT TYPE	LEG (*)
18	INTERNAL PART	(*)	INTERNAL PART	(*)
19	**ACCESSORIES APPLIED BY FABRICATOR**			
20	CLIPS AND RINGS	VTA	AUTO DRAIN TAP	Required
21	DAVID SUPPORT	Required	INLET DEFLECTOR	Required (*)
22	LADDER & PLATFORM CLIPS	Required	EARTH LUG	Required
23	SUPPORT LEF	Required (*)	LIFTING & TAILING LUGS	Required
24	TOP COVER	Required	INSIDE CHEMICAL CLEANING	Pickling and Passivating
25	DRIP PAN INCLUDE VALVE DRAIN	Required	ANCHOR BOLT	Required
26	GRATING OPEN RATIO (%)	VTA		
27	**INSPECTION TEST & CERTIFICATION**			
28	PAINTING & COATING	As per specification	COMPLETE UNIT TEST	Required
29	SKID MOUNTING	Required	STRESS RELIEF	As per Code & Standard
30	RADIOGRAPHY	100%	ASME STAMP	Required
31	PNEUMATIC TEST	As per Code & Standard	MIGAS CERTIFICATION	Required
32	MECHANICAL RUNNING TEST	As per Code & Standard	NAME PLATE	Required
33	PERFORMANCE TEST	Required	DRYER TEST & FUNCTION TEST	Required
34	**MATERIAL OF CONSTRUCTION (*)**			
35	HEADS	SA 516 Gr.70	PLATFORM LADDER & HANDRAIL	By Vendor
36	BOTTOM	SA 516 Gr.70	PLATFORM & LADDER CLIP	By Vendor
37	SHELL	SA 516 Gr.70 / SA 106 Gr.B	CORROSION ALLOWANCE (CA)	HEADS: 3 mm (0.118 in) SHELL: 3 mm (0.118 in)
38	NOZZLE PIPE	SA 106 Gr.B	SHELL THICKNESS	(*) mm
39	FLANGE	SA 105	HEAD THICKNESS	(*) mm
40	SUPPORT	SA 36	EARTHING BOSS / LUGS	SS
41	INTERNAL PARTS	SS 304 L	INSULATION MATERIAL	(*)
42	BOLTS / NUTS (EXTERNAL)	A193 Gr. B8 M/A194 Gr. 8M (Note 38)		

	NOZZLE SCHEDULE FUEL GAS SCRUBBER (*)					**NOZZLE SCHEDULE FUEL GAS FILTER (*)**				
44	MARK	QTY	SIZE (INCH)	RATING / TYPE / FACING (*)	SERVICES	MARK	QTY	SIZE (INCH)	RATING / TYPE / FACING (*)	SERVICES
45	N1	1	(*)	WNRF	INLET FROM TALANG JIMAR	N1	1	(*)	WNRF	INLET FROM TALANG JIMAR
46	N2	1	(*)	WNRF	INLET	N2	1	(*)	WNRF	OUTLET TO GEG PACKAGE
47	N3	1	(*)	WNRF	OUTLET	N3	1	(*)	WNRF	OUTLET
48	N4	1	1/2	WNRF	PSV	N4	1	(*)	WNRF	OUTLET
49	N5	1	(*)	WNRF	OUTLET	N5	1	(*)	WNRF	OUTLET
50	N6 A/B	2	1/2	WNRF	LEVEL TRANSMITTER	N6	1	(*)	WNRF	OUTLET
51	N7	1	(*)	WNRF	PRESSURE TRANSMITTER	N7 A/B	2	3/4	WNRF	LEVEL TRANSMITTER
52	N8 A/B	2	1/2	WNRF	LEVEL GAUGE (BRIDDLE)	N8 A/B	2	3/4	WNRF	LEVEL GAUGE
53						N9	1	3/4	WNRF	PRESSURE TRANSMITTER
54						N10	1	3/4	WNRF	SPARE
55						N11	1	(*)	WNRF	PSV TO FLARE HEADER

56	**ESTIMATED WEIGHT**			
57	EMPTY WEIGHT (kg)	586 (*)	EMPTY WEIGHT (kg)	295.2 (*)
58	OPERATING WEIGHT (kg)	(*)	OPERATING WEIGHT (kg)	(*)
59	SHELL (kg)	(*)	SHELL (kg)	(*)

skkmigas PERTAMINA EP	**JASA PEMBANGUNAN FASILITAS PRODUKSI STASIUN PENGUMPUL (SP)** **TANJUNG MIRING BARAT & KARANGAN TIMUR**	POG

Nomor Dokumen	Judul Dokumen	Rev.	Date	Page
TMBP-SP001-ME-DST-D128	MECHANICAL DATASHEET FOR FUEL GAS PACKAGE (Z-002)	A	19-Des-25	7 OF 8

Applicable to	: **PROPOSAL**	**Client**	: **PT. PERTAMINA EP**
Tag No.	: **Z-002**	**Quantity**	: **1 UNITS**
Service	: **FUEL GAS PACKAGE**	**Code & Standard**	:
P & ID No.	: **TMBP-01-PR-PID-118**	**Manufacturer**	: **As per PML**

1	**SHOP INSPECTION AND TEST**			**PAINTING AND COATING SYSTEM**	
2		REQUIRED	WITNESS	Painting Specification	TMBP-01-PM-SPE-501
3	SHOP INSPECTION	Y			
4	HYDROSTATIC TEST	Y	Y	External Coating System	As per specification
5	MECHANICAL RUN			Internal Coating System	As per specification
6	PACKAGE PERFORMANCE TEST (BY AIR)	Y	Y		
7	NOISE LEVEL TEST	Y		Notes :	
8	DISASSEMBLY / RE-ASSEMBLY				
9	GAS LEAK TEST	Y	Y		
10	FUNCTIONAL TEST FOR UCP (INCL. HEATER CONTROL)	Y	Y		

11	**INSTRUMENTATION AND CONTROL (VENDOR TO ADVICE) REFER TO P&ID**				
12		LOCAL	PCS	PCS	REMARKS
13	ITEM	INDICATION	ALARM	ALARM	
14	FUEL GAS SCRUBBER				
15	UPPER LIQUID LEVEL		Y		
16	LOWER LIQUID LEVEL		Y		
17	DIFFERENTIAL PRESSURE	Y			
18	FUEL GAS INLET PRESSURE	Y			
19	RUNNING STATUS	Y	Y		LOCAL MEANS ON UCP
20	COMMON ALARM / FAULT	Y	Y	Y	LOCAL MEANS ON UCP

21 Symbol Y: Require PCS : Process Control System PSD : Process Shutdown

22 **INSTRUMENTATION AND CONTROL (VENDOR TO ADVICE) REFER TO P&ID**

23–39

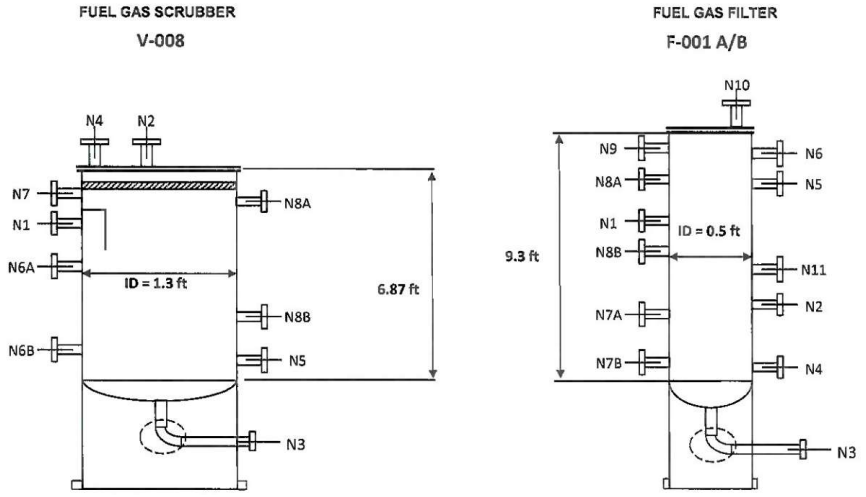

40 **APPLICABLE DOCUMENT**

41 VENDOR TO CONFIRM THAT FABRICATION, INSPECTION AND TESTING SHALL FOLLOW THE REFERENCE CODES, STANDARD, PROJECT SPECIFICATIONS SUCH MENTION BELLOW:

42 - TMBP-01-ME-SPE-152 SPECIFICATION - FUEL GAS SYSTEM PACKAGE

43 - TMBP-01-ME-SPE-601 SPECIFICATION - PRESSURE VESSEL (ASME)

44 - TMBP-01-PM-SPE-501 GENERAL PAINTING SPECIFICATION

Applicable to	: **PROPOSAL**	**Client**	: **PT. PERTAMINA EP**
Tag No.	: **Z-002**	**Quantity**	: **1 UNITS**
Service	: **FUEL GAS PACKAGE**	**Code & Standard**	:
P & ID No.	: **TMBP-01-PR-PID-118**	**Manufacturer**	: **As per PML**

1	**APPLICABLE DOCUMENT (CONTINUED)**
2	- TMBP-01-EL-SPE-103 SPECIFICATION - ELECTRICAL INSTALLATION & TESTING
3	- TMBP-01-EL-SPE-104 SPECIFICATION - ELECTRICAL REQUIREMENT FOR PACKAGE EQUIPMENT
4	- TMBP-01-IN-SPE-105 GENERAL SPECIFICATION FOR INSTRUMENT
5	- TMBP-01-IN-SPE-103 SAFETY AND RELIEF VALVE SPECIFICATION
6	- TMBP-01-IN-SPE-106 GENERAL SPECIFICATION FOR INSTRUMENT AND CONTROL
7	- TMBP-01-IN-SPE-104 INSTRUMENT CABLE SPECIFICATION
8	- TMBP-01-PI-SPE-501 PIPING MATERIAL SPECIFICATION
9	- TMBP-01-IN-SPE-101 CONTROL VALVE SPECIFICATION
10	- TMBP-01-PS-PHI-102 ENVIRONMENTAL PHILOSOPHY
11	- TMBP-01-CS-SPE-509 SPECIFICATION FOR STEEL STRUCTURE & ANCHOR BOLT
12	- TMBP-01-PR-HMB-101 HEAT MATERIAL BALANCE
13	- TMBP-01-PR-PID-118 P&ID FOR FUEL GAS SYSTEM
14	**NOTES (CONTINUED)**
15	1. Vendor to Furnish data merked " VENDOR to advise, ". " * ", or "VTA"
16	2. VENDOR shall be responsible for detailed engineering of the package
17	3. All Vessel Instrumentation nozzle (such as level gauge, temperature indicator, pressure indicator, etc.)
18	4. LCV Outlet and PSV Outlet shall equipped on the Vessel
19	5. VENDOR shall verify this datasheet based on latest PID prior Purchasing Order.
20	6. VENDOR shall submit the thickness calculation for each shell, bottom, and top plate and the other calculation as required.
21	7. VENDOR to advise on recommended vessel dimension and internals
22	8. VENDOR shall provide overall weight information within skid battery limit
23	9. VENDOR to furnish nozzle sizes, location & orientation
24	10. Scrubber shall be sized for removal 99.99% of all liquid droplets of size 10 micron and larger.
25	11. Gasket shall be 0.175" thick flexitalic style CGI, Spiral Wound, Teflon Filled, 316SS Windings, per ASME B16.20. SS 316 Inner & Outer Ring
26	12. Wind speed 64.44 mph, Seismic Design Code ZONE 2A, Soil Type as per soil investigation
27	13. Vessel shall be completed with manhole or handhole as required complete with Hinge and Davits.
28	14. The fuel gas skid Vendor shall confirm the fuel gas rate and temperature required to Fuel Gas Distribution
29	15. All pipe work within skid shall be so arranged that all maintainable items are easily accessible and capable of being removed.
30	16. All Owner's interface piping shall be terminated at skid edge with flange ends
31	17. Access platforms and ladders shall be provided for all instrumentation /control/ valves which require monitoring / maintenance.
32	18. As a minimum vessel shall be sized for liquid residence time of 5 minutes at normal operation.
33	19. All internal shall be bolted to supports welded to the vessel.
34	20. 20% margin has been considered for inlet flowrate
35	21. Vendor to provide separation efficiency calculation for the demisting device
36	22. Vendor to provide pressure drop calculation for the demisting device.
37	23. The fuel gas skid vendor shall confirm the fuel gas rate and temperature required to the fuel gas distribution
38	24. All metallic material shall be procvided with inspection certificate in accordance with BS/EN 10204, 2004 edition, pressure parts with type 3.1 certification, and non pressure parts with type 2.2 certification.
39	25. Ultrasonic examination shall be concluded for laminar defects and inclusions in accordance ASTM A578, level A for shell, head and lifting plate material.
40	26. VENDOR to calculate hydraulic calculation within package
41	27. VENDOR design shall consider gas composition and properties to be used as fuel gas
42	28. Fuel gas package shall have provision to accommodate possible variation of raw gas resultin in low heating value variation of 10%.
43	29. All repair welded joint shall have provision to accommodate possible variation of raw gas resultin in low heating value variation of 10%
44	30. All electrical, instruments, coontrol shall be suitable for specified area classification where installed
45	31. All electrical, instruments, coontrol shall be suitable for specified area classification where installed
46	32. All fields instrumentaion & control panel, junction box should be in accordance with general specification for instrument and general specification for control panel
47	33. Control panel shall be placed on skid included with package equipment
48	34. All field electrical & instrument cable should be armour type. Armoured: Galvanize steel wired braid armoured type.
49	35. Vendor shall be responsible for shop acceptance test and site acceptance test. Final acceptance will be after successful start up / commissioning unit
50	36. Vendor specialized for commissioning shall assist company during pre-commissioning.
51	37. Spare parts list for 2 years operation shall be clearly defined by Vendor and shall also be included in the quotation but will be purchased separately, complete with part number and quantity.
52	38. All external bolts, nuts, and washers shall be fluorocarbon coated
53	39. VENDOR to submit all VDRL Documents including Datasheet, GA Drawing, Calculation, and all centrification required.